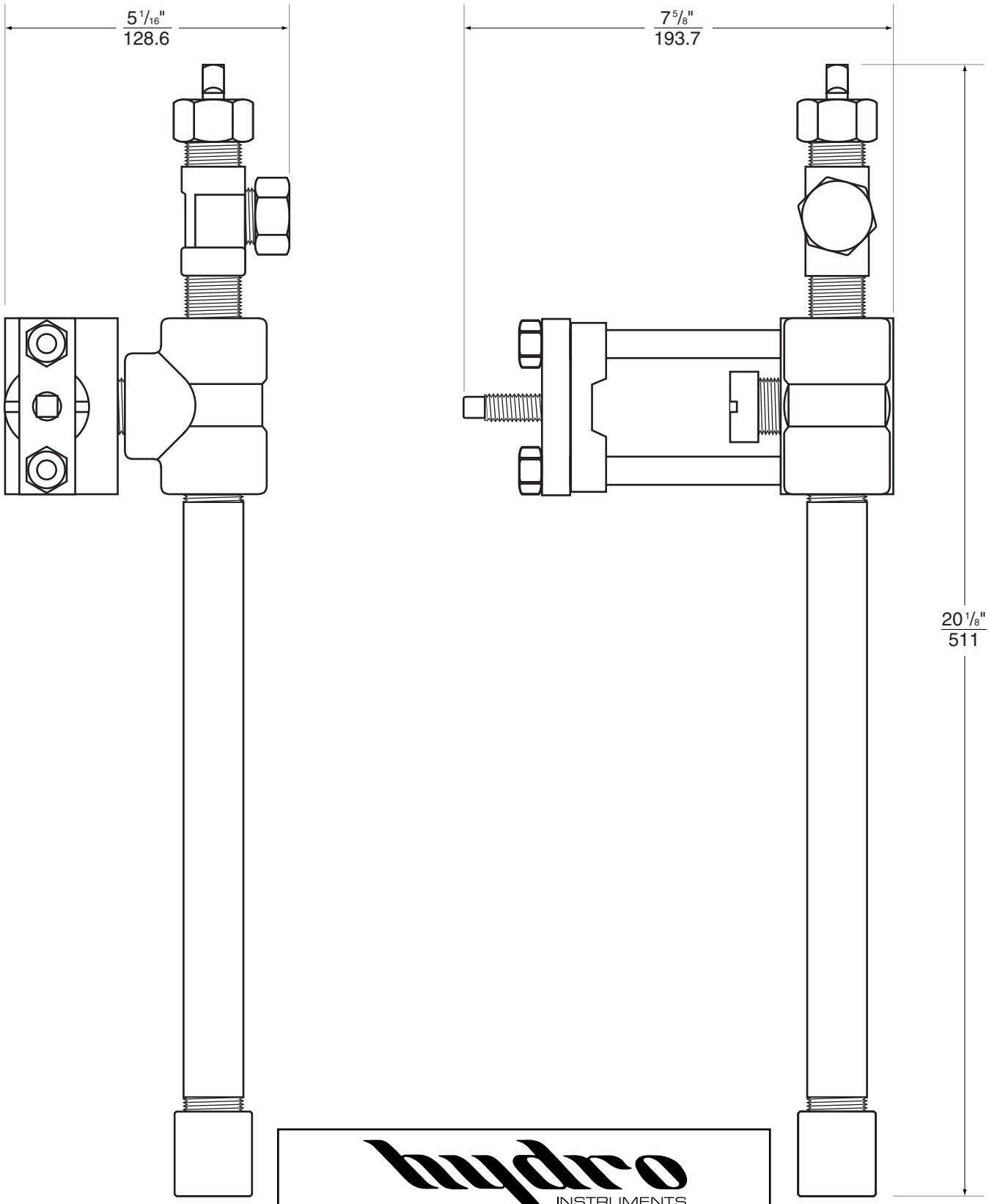

hydro INSTRUMENTS

TITLE	DATE
Drip Leg	12/12/2003

SCALE	MEASUREMENTS	DWG. NO.
40%	Inches / Millimeters	?